SPECTRE HOLOGRAPHIC ELECTRIC FIREPLACE

Model# BEF-31BI-LCD05 (Spectre 28)

OWNER'S MANUAL



Spectre 28"
Advance Holographic Built-in Electric Fireplace
AC 220V-240V 50Hz 1400-1600W

⚠ **WARNING**	**Read and understand** this entire owner's manual, including **all safety information**, before **plugging in** or **using** this product. Failure to do so could result in **fire, electric shock, or serious personal injury.**
⚠ **CAUTION**	**Keep this owner's manual** for future reference. If you sell or give this product away, **make sure this manual accompanies this product**.

CE

IMPORTANT SAFETY INFORMATION!

⚠ WARNING

When using electrical appliances basic precautions should always be followed to reduce the risk of fire, electric shock and injury to persons, including the following:

- Read all instructions before using this heater.
- This heater is hot when in use. To avoid burning, do not touch hot surface. If provided, use handles when moving this heater. Keep combustible materials, such as furniture, pillows, bedding, papers, clothes, and curtains at least 1 m from the front of the heater and keep them away from the sides and rear. In order to avoid overheating, do not cover the heater.
- Extreme caution is necessary when any heater is used near children or the infirm and whenever the heater is left operating and unattended.
- Always unplug heater when not in use.
- Do not operate any heater with a damaged cord or plug or after the heater malfunctions, has been dropped damaged in any manner, return heater to authorized service facility for examination, electrical or mechanical adjustment, or repair.
- Indoor use only, do not use outdoors.
- This heater is not intended for use in bathrooms, laundry areas and similar indoor locations. Never locate heater where it may fall into a bathtub or other water container.
- Do not run cord under carpeting. Do not cover cord with throw rugs, runners, or similar coverings. Arrange cord away from traffic area and where it will not be tipped over.
- To disconnect heater, turn controls to off, then remove plug from outlet.
- Do not inset or allow foreign objects to enter any ventilation or exhaust opening as this may cause an electric shock or fire, or damage the heater.
- To prevent a possible fire, do not block air intakes or exhaust in any manner. Do not use on soft surfaces, like a bed, where openings many become blocked.
- A heater has hot and arcing or sparking parts inside. Do not use it in areas where gasoline, or flammable liquids are used or stored.
- Use this heater only as describes in this manual. Any other use not recommended by the manufacturer may cause fire, electric shock, or injury to persons.
- DANGER-HIGH Temperatures may be generated under certain abnormal conditions. Do not partially or fully cover or obstruct the front of this heater.
- Replacement of the lamps should be done only while the heater is disconnected from the supply circuit.
- This appliance is not intended for use by persons (including children) with reduced physical, sensory or capabilities, or lack of experience and knowledge, unless they have been given supervision or instruction concerning use of the appliance by a person responsible for their safety. Children should be supervised to ensure that they do not play with the appliance.
- CAUTION: In order to avoid a hazard due to inadvertent resetting of the thermal cut-out, this appliance must not be supplied through an external switching device, such as a timer, or connected to a circuit that is regularly switched on and off by the utility.
- **WHEN INSTALLING YOUR ELECTRIC FIRE INTO A TRADITIONAL BRICK CHIMNEY, ALWAYS ENSURE CHIMNEY HAS BEEN BLOCKED OFF, FAILURE TO DO SO MAY RESULT IN FAILURE OF FAN HEATER DUE TO EXCESSIVE DRAUGHT.**

Preparation

This product includes a **GLASS panel!** Always use **extreme caution** when handling **glass.** Failure to do so could result in **personal injury** or **property damage**.

Remove all parts and hardware from the carton and place them on a clean, soft, dry surface. Parts and assembly steps are grouped for wall-hanging or recessing use. Check the parts list to make sure nothing is missing. Dispose of packaging materials properly. Please recycle whenever possible.

You will need the following tools (not included): Phillips screwdriver; stud finder; level; tape measure; electric drill; 1/4" wood drill bit, hammer.

Parts and Hardware

<table>
<tr><td rowspan="2">
A – Log-set</td><td></td><td>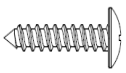</td><td></td></tr>
<tr><td colspan="2">**B -** Wood Screws</td><td>**C -** Drywall anchors</td></tr>
<tr><td colspan="2"></td><td></td></tr>
<tr><td colspan="2">**D -** Remote Control</td><td>**E -** Suction Cup</td></tr>
<tr><td></td><td></td><td></td><td></td><td>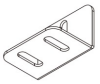</td></tr>
<tr><td>**F** - Charred Glass</td><td>**G –** Charred Wood Chips</td><td>**H -** Vermiculite Ash</td><td>**I -** Loose logs</td><td>**J -** "L" bracket</td></tr>
</table>

Specification and Dimension

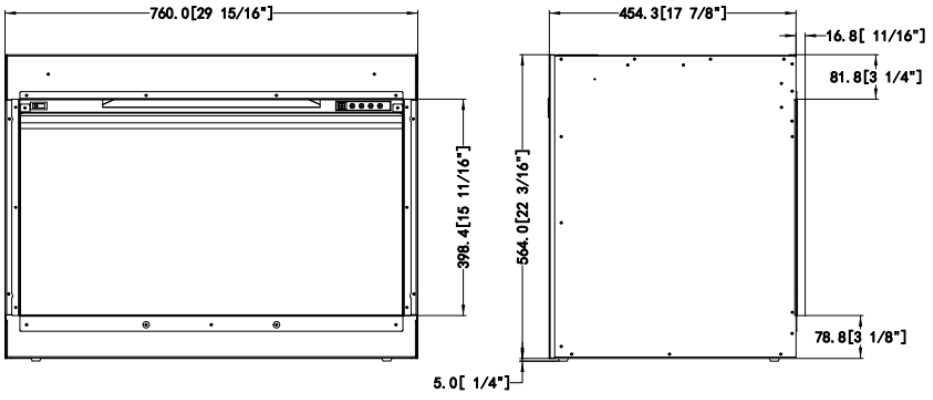

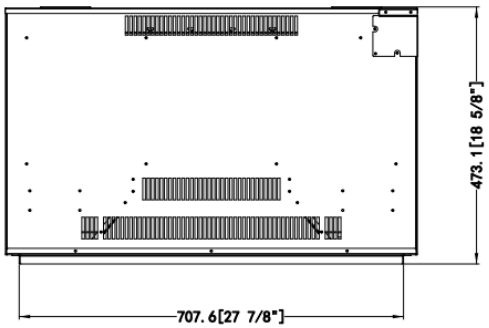

Installation and Assembly

Your appliance is built-in appliance. Select a suitable location that is not susceptible to moisture and is away from drapes, furniture and high traffic areas.

IMPORTANT:

WHEN INSTALLING YOUR ELECTRIC FIRE INTO A TRADITIONAL BRICK CHIMNEY, ALWAYS ENSURE CHIMNEY HAS BEEN BLOCKED OFF, FAILURE TO DO SO MAY RESULT IN FAILURE OF FAN HEATER DUE TO EXCESSIVE DRAUGHT.

MINIMUM CLEARANCE TO COMBUSTIBLES

Measurements are taken from the glass front.			
Bottom	**0"**	**Top**	**11. 8" (300mm) to mantel**
Sides	**0"**	**Top**	**11.8" (300mm) to ceiling**
Back	**0"**		

Front Glass Installation / Removal

- Take off all screws from the side the glass panel. Fig.1-1
- Tilt the front glass forwards, and have two people to move out the glass panel. Fig.1-2
- Reverse these steps to re-install the front glass.



Fig.1-1

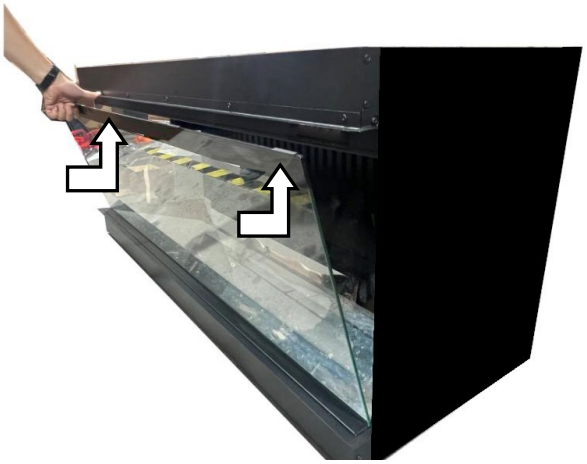

Fig.1-2

Sloped Holographic Glass Installation / Removal

- Use the suction cup **(E)**(supplied) to install the slopped holographic glass. Fig.1-3
- Tilt the glass upwards, and mounting the glass to the pins. Fig.1-4
- Reverse these steps to remove the glass.



Fig.1-3



Fig.1-4

Installation - Rough Framing

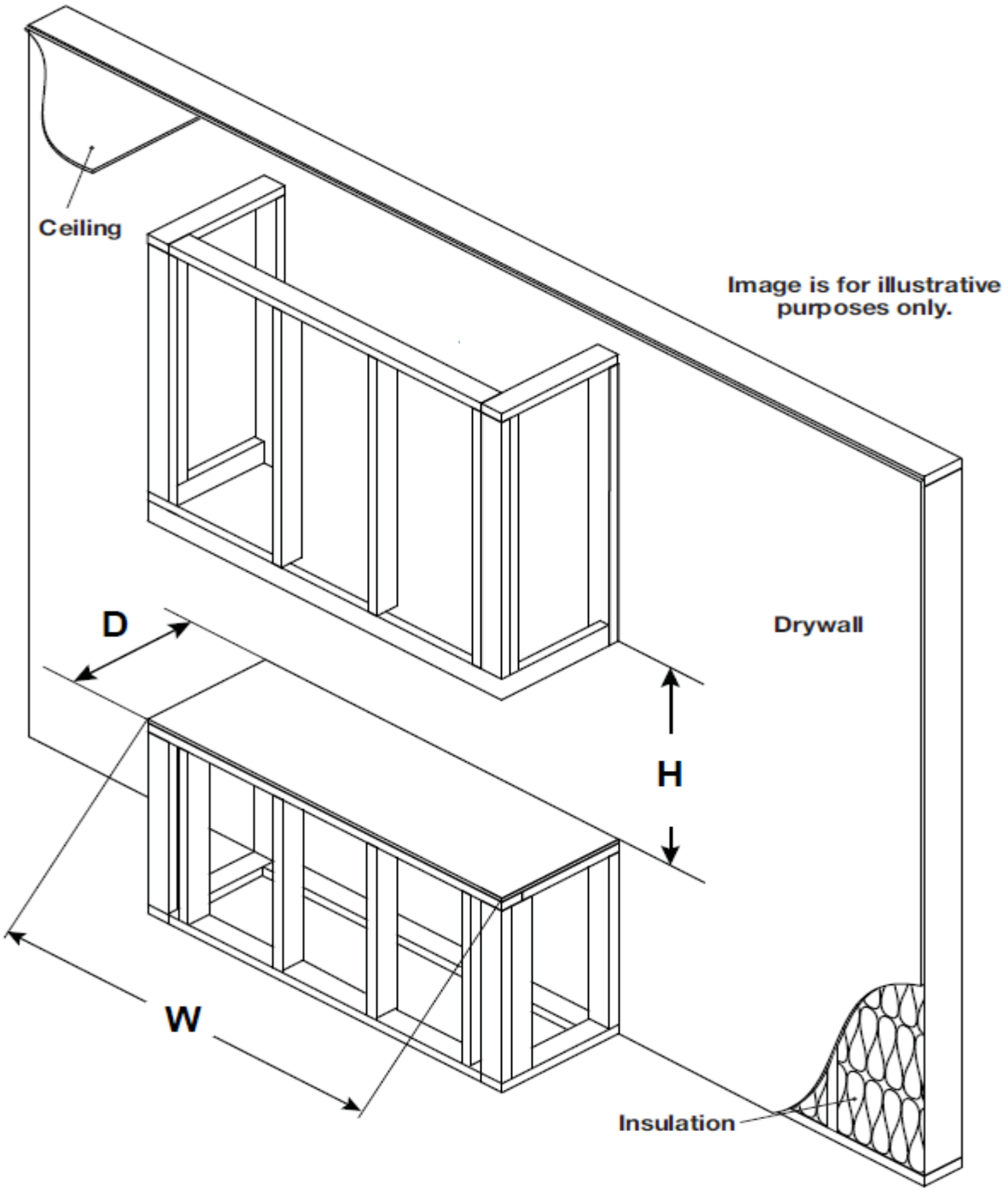

Model Number	W	D	H
BEF-31BI-LCD04	29 15/16” 760mm	18 1/4” 464mm	22 1/4” 564mm

Note:
Appliance is NOT load-bearing. Carefully consider weight of finishing materials when constructing rough framing.
Ensure installation complies with all local building codes and requirements.

Installation - Fireplace

Step1. Remove the screws from the fireplace as shown in the picture below. Fig.3-1

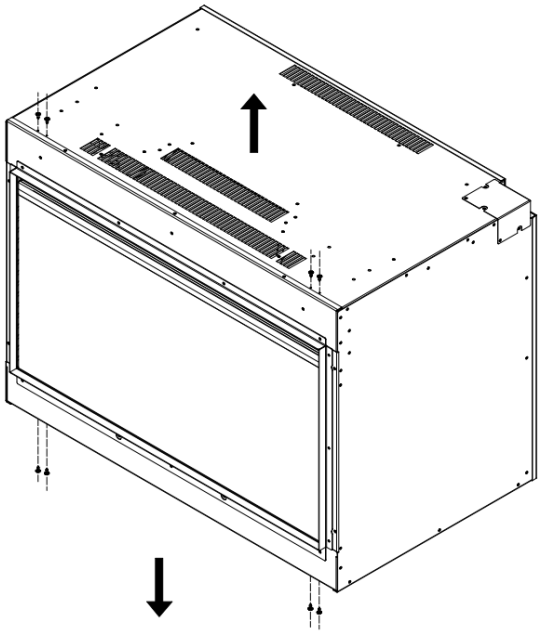

Fig.3-1

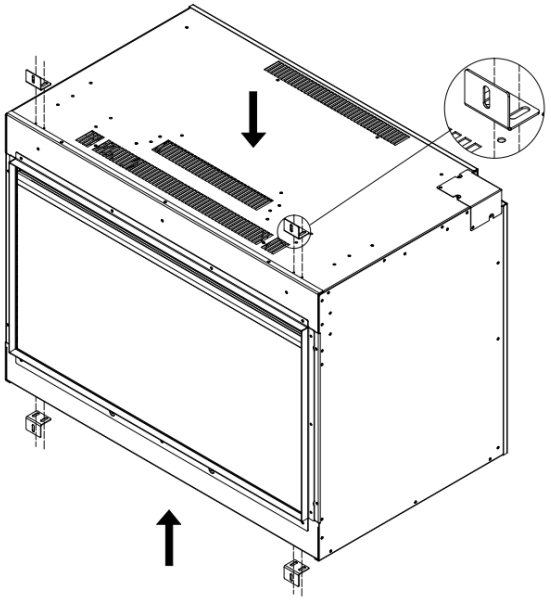

Fig.3-2

Step2. Fix the L shape brackets **(J)** with the screws in the previous step. Fig.3-2

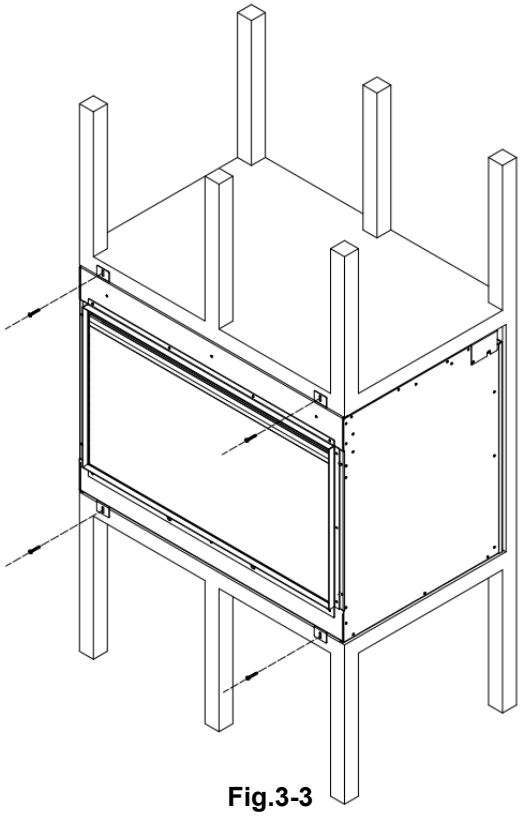

Fig.3-3

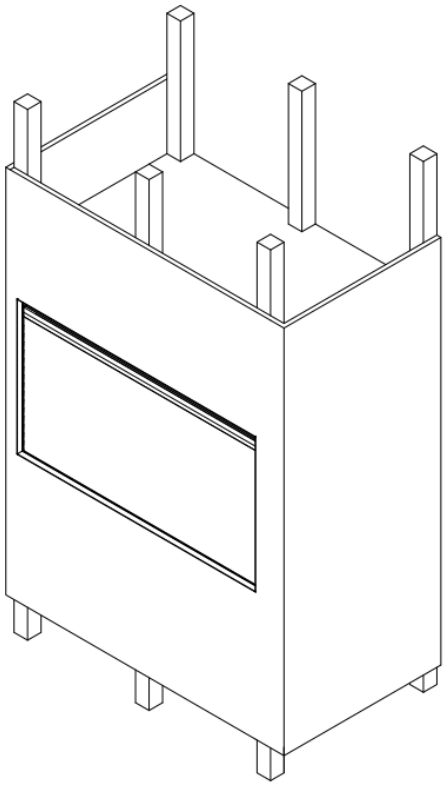

Fig.3-4

Step3. Insert the fireplace into the opening. Fix the screws through the brackets into the wall studs. Plug in and check if the fireplace works properly.Fig.3-3

Step4. Cover the fireplace opening to protect during finishing material installation.Fig.3-4

Fuel-bed Decorative Media Installation

A. Front glass and sloped holographic glass must be removed and the appliance must be mounted in its final location before the ember media are installed.

B. Put the log-set **(A)** into the ember bed and connect it to power at the ember-bed terminal. **Fig.4-1**

C. Carefully place the charred glass **(F)** evenly on the fuel-bed tray in a side-to-side motion. **Fig. 4-2**

D. Randomly place the vermiculite ash **(H)** on the surface of the charred glass. **Fig. 4-3**

E. Randomly place the charred wood chips **(G)** on the surface of the charred glass. **Fig. 4-4**

F. Re-install the sloped holographic glass, and then re-install the front glass.



Fig.4-1



Fig.4-2



Fig. 4-3



Fig. 4-4



After Installation

Operation

Read and understand this entire owner's manual, including **all safety information**, before **plugging in** or **using** this product. Failure to do so could result in **electric shock, fire, serious injury, or death.**

Power

Plug the power cord into an AC 220-240 Volt outlet (see **IMPORTANT SAFETY INFORMATION** on **Pages 2 and 3**). Make sure the outlet is in good condition and that the plug is not loose. **NEVER** exceed the maximum amperage for the circuit. **DO NOT** plug other appliances into the same circuit.

Methods of Operation

This electric fireplace can be operated by the TOUCH PANEL, by the battery-powered REMOTE CONTROL, or by the SMART APP.

Before operating, please review the **IMPORTANT SAFETY INFORMATION** on **Pages 2 and 3,** and heed all warnings.

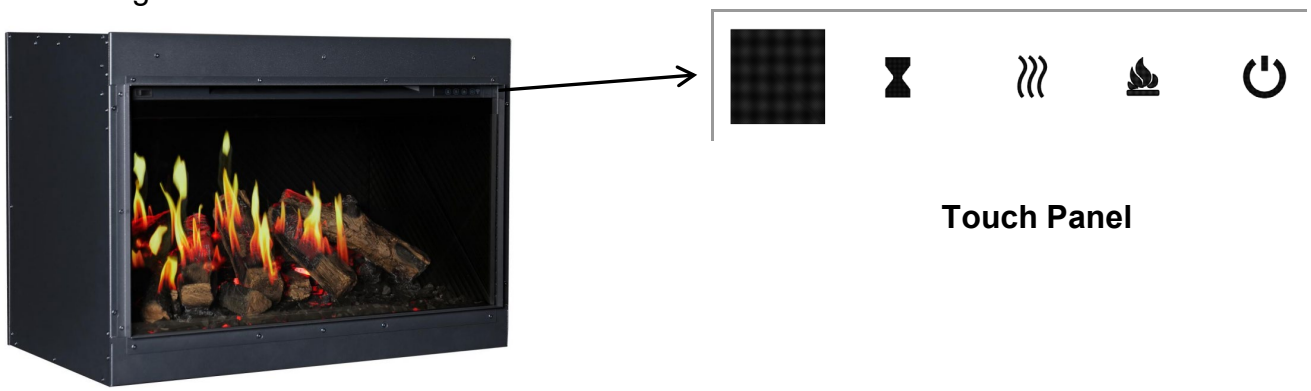

Touch Panel

Touch Panel Operation		
Button	**Function**	**Action**
POWER	**ON:** Enables control panel functions. Turns on flame. **OFF:** Disables control panel functions. Turns off flame.	**1. Press once:** Indicator light turns on. Power turns on. All functions enabled. **2. Press again:** Flame turns off. Unit goes to standby. All functions turn off. **3. Press & Hold** for 5 seconds: Places fireplace in remote paring mode. Displays **P1** while pairing.
FLAME	**FLAME BUTTON:** Changes between flame presets. **NOTE:** Color effect stays on until power button is turned off. **NOTE:** This fireplace has memory function for flame presets.	**1. Press once:** Flame color illuminates. **2. Press again** until desired preset color is reached. In total, three styles of flame with two colors for each flame. **1C-2C** **NOTE: Press and hold for 5 seconds to start connecting with App.**

HEATER	**HEATER BUTTON:** Turns heater on and off. **NOTE:** The heater only works when the flame is on. If the flame is off, the heater will not turn on. **NOTE:** To prevent overheating, the heater fan will blow cool air for 8-10 seconds after the heater turns off.	**1. Press once:** Turns the heater and blower on. **2. Press again** until it cycles thru the heater settings. Settings: **H0** - Heater and blower off. **F** – Fan only. **H1** - Low Heat. **H2** - High Heat. **NOTE:** Press and hold the heater button for 5 seconds to lock/unlock the heater and thermostat. **H0** will flash on the display when locked.
TIMER	**TIMER BUTTON:** Controls timer settings to turn off fireplace at selected time. Settings range from 30 min to 8 hours.	**1. Press once:** Indicator light turns on. Timer defaults to 0.5 hours. **2. Press again** until desired setting is reached. **00(off)-30-1H-2H-3H-4H-5H-6H-7H-8H**

Operation – Remote Control

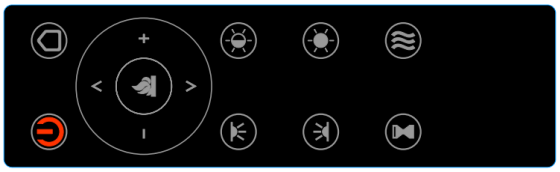

Remote Control Operation

Button	Function	Action
	ON: Enables control panel functions. Turns on flame. **OFF:** Disables control panel functions. Turns off flame.	**1. Press once:** Indicator light turns on. Power turns on. All functions enabled. **2. Press again:** Flame turns off. Unit goes to standby. All functions turn off.
	HOME BUTTON: Returns the fireplace to the default color settings.	
	FLAME BUTTON: Cycles between flame styles and colors. **∧: Cycles up** between presets of current flame styles. **v: Cycles down** between presets of current flame styles. **+: Increases** flame speed of current flame style and color. **--: Decrease** flame speed of current flame style and color. **NOTE:** This fireplace has memory function for flame.	**1. Press flame button once:** Flame switches to next flame style in the sequence **2. Press flame button again** until desired style is reached. In total, three flame styles. **Note: Press and hold for 5 seconds, enables the Wi-Fi pairing mode** **3. Press ∧ once:** Changes up to the next preset of current flame style. **4. Press ∧ again** until desired preset is selected from **1C-2C.** **5. Press v once:** Changes down to the next preset of current flame style. **6. Press v again** until desired preset is selected from **2C-1C.** **7. Press + button** to increase the flame speed. Displayed: **01-02-03.** **8. Press button** to decrease the flame speed. Displayed: **03-02-01.**

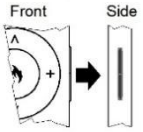	**AUDIO BUTTON:** Raises and lowers the audio from the fireplace.	**1. Press once:** Changes the volume level. **2. Press again** cycles between volume settings. Volume settings: **S0** - Off **S1** - Low **S2** - Medium **S3** - High
	**DOWNLIGHT BUTTON:** Cycles down light colors. **NOTE:** Down-light color effect stays on until power button is turned off. This fireplace has memory function for down light settings.	**1. Press once:** Cycle down-light. **2. Press again** until desired color is reached. In total ten colors and one fade mode.**01-02-03-04-05-06-07-08-09-10** **NOTE:** Press and hold for 5 seconds to turn on night light mode.
	**DOWNLIGHT BRIGHTNESS BUTTON:** Makes down-light dimmer and brighter. **NOTE:** LED down light brightness stays on until power button is turned off.	**1. Press once:** Brightness becomes active. **2. Press again** until desired setting is reached. In total 5 levels. From **b5 - b4 - b3 - b2 - b1**
	**MEDIA BED BUTTON:** Cycles media bed colors. **NOTE:** Media bed color effect stays on until power button is turned off. This fireplace has memory function for media bed settings.	**1. Press once:** Turns on ember bed. **2. Press again** until desired color is reached. In total ten colors and one fade mode.**01-02**
	**MEDIA BRIGHTNESS BUTTON:** Makes media bed dimmer and brighter. **NOTE:** LED media light brightness stays on until power button is turned off.	**1. Press once:** Brightness becomes active. **2. Press again** until desired setting is reached. In total 5 levels. From **b5 - b4 - b3 - b2 - b1**
	**TIMER BUTTON:** Controls timer settings to turn off fireplace at selected time. Settings range from 30 min to 8 hours.	**1. Press once:** Indicator light turns on. Timer defaults to 0.5 hours. **2. Press again** until desired setting is reached. **00(off)-30-1H-2H-3H-4H-5H-6H-7H-8H**
	**HEATER BUTTON:** Turns heater on and off. **NOTE:** The heater only works when the flame is on. If the flame is off, the heater will not turn on. **NOTE:** To prevent overheating, the heater fan will blow cool air for 8-10 seconds after the heater turns off.	**1. Press once:** Turns the heater and blower on. **2. Pressing Additionally:** Cycles thru heater settings. Settings: **H0** - Heater and blower off **F –** Fan Only **H1** - Low Heater **H2** - High Heater **NOTE:** Press and hold the heater button for 5 seconds to lock/unlock the heater and thermostat. **H0** will flash on the display when locked.

Temperature Limiting Control

This heater is equipped with a Temperature Limiting Control. Should the heater reach an unsafe temperature, the heater will automatically turn OFF. To reset:

1. Unplug the power cord from the outlet.
2. Turn the ON/OFF switch on the CONTROL PANEL to OFF. **Wait 5 minutes.**
3. Inspect the fireplace to make sure no vents are blocked, or clogged with dust or lint. If they are, use a vacuum to clean the vent areas.
4. With the POWER switch in the OFF position, plug the power cord back into the outlet.
5. If the problem continues, have your outlet and wiring inspected by a professional.

Remote Control Battery Information

- Remote control uses one CR2032 battery (**Included**)

NEVER dispose of batteries in **fire.** Failure to observe this precaution **may result in an explosion**. Dispose of batteries at your local hazardous material processing center.

⚠WARNING

- **INGESTION HAZARD**: This product contains a button cell or coin battery.
- **DEATH** or serious injury can occur if ingested.
- A swallowed button cell or coin battery can cause **Internal Chemical Burns** in as little as **2 hours**.
- **KEEP** new and used batteries **OUT OF REACH of CHILDREN**
- **Seek immediate medical attention** if a battery is suspected to be swallowed or inserted inside any part of the body.



Care and Maintenance

Cleaning

ALWAYS turn the heater **OFF** and **unplug the power cord from the outlet** before cleaning, performing maintenance, or moving this fireplace. Failure to do so could result in **electric shock, fire, or personal injury**.

NEVER immerse in water or **spray with water.** Doing so could result in **electric shock, fire, or personal injury.**

Metal:

- Buff using a soft cloth, slightly dampened with a citrus oil-based product.
- **DO NOT** use brass polish or household cleaners as these products will damage the metal trim.

Glass:

- Use a good quality glass cleaner sprayed onto the cloth or towel. Dry thoroughly with a paper towel or lint-free cloth.
- **NEVER** use abrasive cleansers, liquid sprays, or any cleaner that could scratch the surface.

Vents:

- Use a vacuum or duster to remove dust and dirt from the heater and vent areas.

Plastic:

- Wipe gently with a slightly damp cloth and a mild solution of dish soap and warm water.
- **NEVER** use abrasive cleansers, liquid sprays, or any cleaner that could scratch the surface.

Maintenance

Risk of electric shock! DO NOT OPEN any panels! No user-serviceable parts inside!

ALWAYS turn the heater **OFF** and **unplug the power cord from the outlet** before cleaning, performing maintenance, or moving this fireplace. Failure to do so could result in **electric shock, fire, or personal injury**.

Electrical and Moving Parts:

- The fan motors are lubricated at the factory and will not require lubrication.

Storage:

- Store heater in a clean dry place when not in use.

WARNING! NO SERVICING of the internal or electrical parts should be performed by the consumer. Do not service the unit yourself.

DO NOT RETURN THE PRODUCT!



CONTACT YOUR LOCAL DEALER PLEASE.

WANDERS FIRES & STOVES
Amtweg 4
7077 AL NETTERDEN
Netherlands
+31 (0) 315-386-414
service@wanders.nl.



WEEE：

Meaning of crossed –out wheeled dustbin:
Do not dispose of electrical appliances as unsorted municipal waste, use separate collection facilities. Contact your local government for information regarding the collection systems available. If electrical appliances are disposed of in landfills or dumps, hazardous substances can leak into the groundwater and get into the food chain, damaging your health and well-being.
When replacing old appliances with new ones, the retailer is legally obligated to take back your old appliance for disposals at least free of charge.